DAIWON	19620-3MAS
Application	CCTV
Focal Length	1.9㎜
Back Focal Length	6.0㎜
Total Track Length	25.0㎜
F No.	2.0
Iris	Fixed
Image Circle Diameter	Φ 5.6
Sensing Area	1/3"(AR0331)
Optical Distortion	-87.2%
TV Distortion	-31.0%
Angle of View – Diagonal	170.0°
Angle of View – Horizontal	132.0°
Angle of View – Vertical	99.0°
Chief Ray Angle(1.0F)	15.0°
Relative Illumination(1.0F)	73.0%
M.O.D	50cm - ∞
Resolution – On-Axis	47.9% @152lp/㎜
Resolution – 0.7 Field	54.7% @114lp/㎜
Wavelength	Visible & IR
Filter	-
Waterproof	-

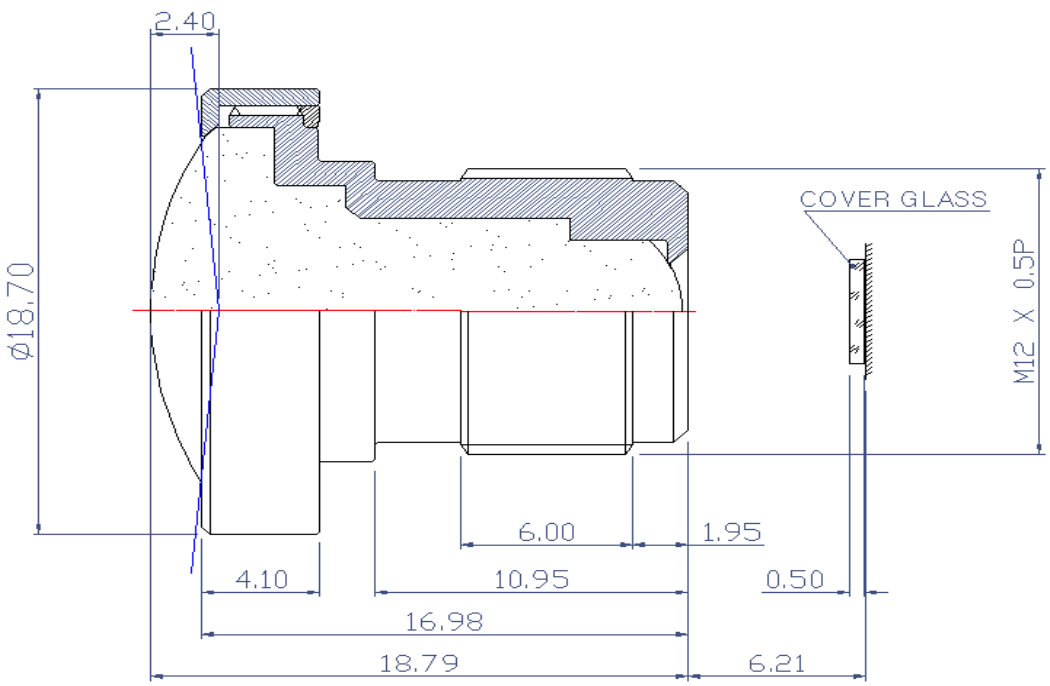

Tolerance : ±0.4mm